City of Pittsburg

Community Development - Building Division
65 Civic Ave, Pittsburg CA 94565
Phone: (925) 252-4910 Fax: (925) 252-4814
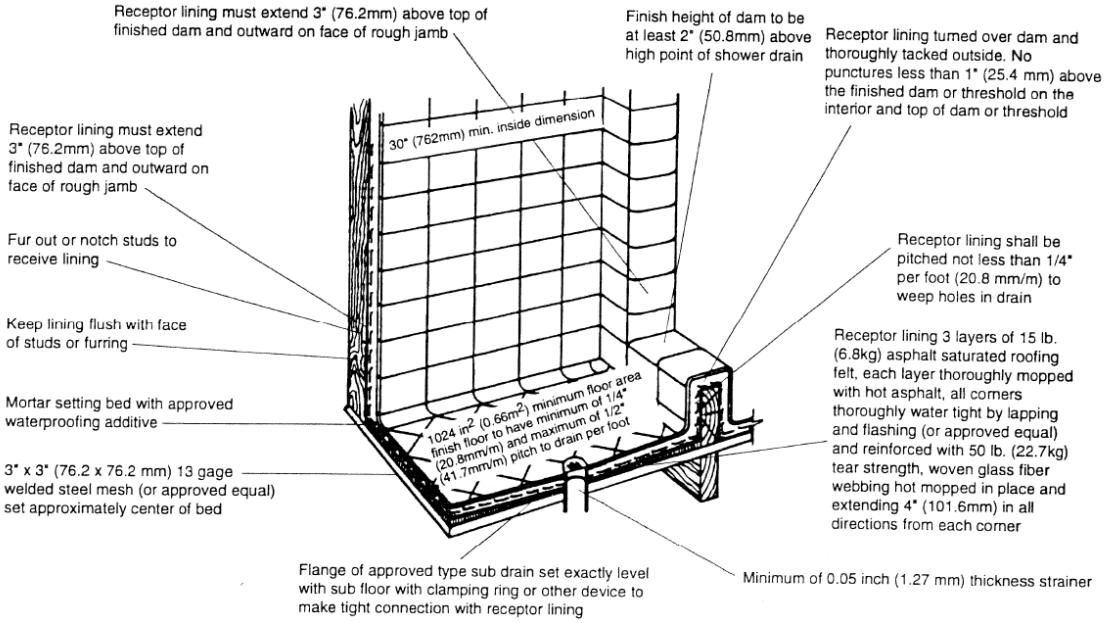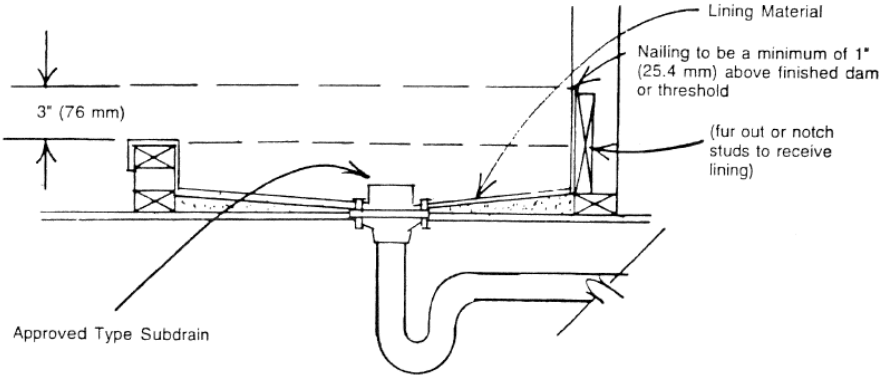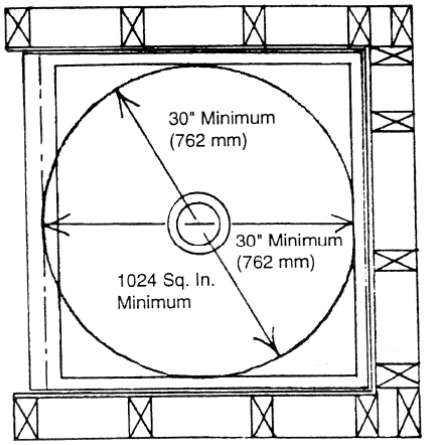
Shower Receptor and Lining
2016 CPC, Section 408.6 & 408.7